Exhibitor Rules & Booth Guidelines

premiereorlando
International Beauty Event

CORNER BOOTH

- A Corner Booth is exposed to aisles on two sides. All other guidelines for Linear Booths apply.

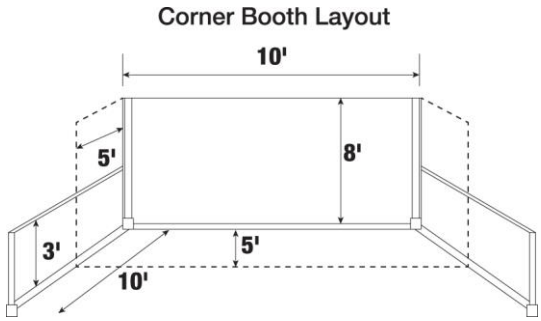

INTERIOR BOOTH

- Interior Booths have only one side exposed to an aisle and are generally arranged in a series along a straight line.

PENINSULA BOOTH

- A peninsula booth is exposed to aisles on three (3) sides. Peninsula exhibits must limit the center 10′ of 20′ back wall to 8′ in height. The remaining 5′ on either side of the back wall is limited to 4′ in height.

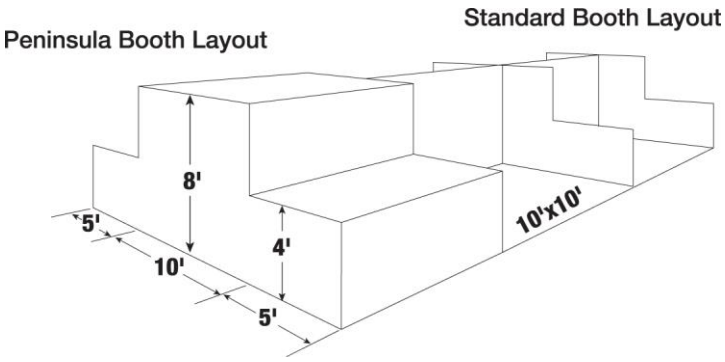

ISLAND BOOTH

- An Island Booth is any size booth exposed to aisles on all four sides.

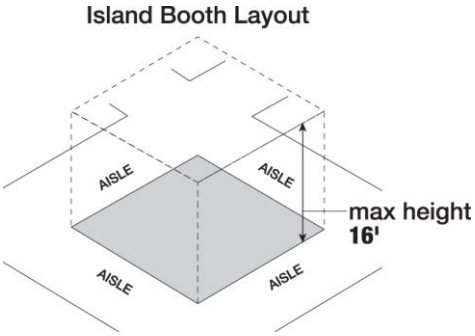

BOOTH HEIGHT & REGULATIONS

- **Height Restrictions** (Rule applies to corner, interior and peninsula booths)
- No part of a display along the back drape section of the booth may be higher than 10′. The back wall drape is supplied by Premiere to the exhibitor at 8′ high. If an exhibitor chooses to go the maximum height of 10′, they must rent 10′ drape to cover any portion above 8′. ***(drape must match show colors)***
- If drape is not ordered the exhibitor will be asked to lower or dismantle the display to accommodate the 8′ drape height.
- ***If an exhibitor does not comply with lowering their display, exhibitor in violation will be responsible for covering all fees.***
- In the case of a standard 10′ X 10′ booth, any side wall extending 5′ from the back wall of the display booth shall not exceed 8′ in height, and the remaining 5′ side wall or divider extending out to the aisle between display booths shall not exceed 4′ in height. No exhibit booths shall be allowed to obstruct clear vision to other booths in the same line or adjacent lines, unless it is an island display having four (4) sides.
- Exhibitors using a hard back wall must leave a nine inch (9″) clearance at the rear of the booth for access to electrical equipment, etc. Back to back hard walls must have eighteen inches (18″) between the hard walls.
- In the case of a multi-level booth display, Premiere Show Group must be notified and blue prints must be made available for approval of such construction.
- **The maximum height of an island booth shall be 16′.**

HANGING SIGNS

- Exhibitors with less than four booths are prohibited from hanging signs/banners above their booth. There are limited points in the exhibit halls from which to hang signs, banners, etc. Exhibit booth signs, banners, booth ceilings or canopies, lighting grids or other exhibit related equipment should be free standing and floor supported where possible. Attachment to exhibit hall ceiling beams or trusses is permitted only through the Orange County Convention Center. Request for approval of hanging signs and banners must be submitted to Premiere Show Group by May 4, 2018. The request must include a description or drawing of the sign/banner, proposed method of installation, location of hanging points, and total weight. Hanging signs/banners may not exceed 50% of the perimeter space assigned to the exhibiting company or a height of 18′ unless approved in writing by Premiere Show Group.

BOOTH AESTHETIC GUIDELINES

- All tables within your booth must be draped and/or skirted.
- All signs must be professionally produced and/or created. "Last minute", hand-lettered signage is strictly prohibited.
- The use of corrugated boxes, unlabeled bins, etc. to display and/or sell merchandise is strictly prohibited.
- Unsightly storage of inventory within your booth area during show hours (i.e. stacked boxes/cartons of product) is not permitted.
- Premiere Orlando Show urges all exhibits and displays to convey a professional and high-quality image. *Professionally* produced exhibits are encouraged.
- Premiere Show Group reserves the right to decline or prohibit any exhibit, which, in its judgment, is not suitable to or in keeping with the character of the exhibition. This reservation is all-inclusive and concerns persons, things, conduct, printed matter and souvenirs.
- In all cases Premiere Show Group shall have the absolute right to require Exhibitor, at Exhibitor's expense, to change, alter, modify, or remove all or part of his exhibit or display booth. Grounds for such action shall include but not be limited to:
    - Lack of aesthetic uniformity or harmony with other display booths at the Premiere Orlando Show.
    - Non-compliance with express restrictions on the dimensions of the display booth or any part thereof whether contained in the Space Contract or the Exhibitor's Manual.
    - Objectionable noises or odors emanating from the display booth.
    - Objectionable signs or lights in the display booth.
    - Obstruction of aisles or of other display booths.
    - Objectionable clothing or attire worn by Exhibitor's personnel, his agents or models.
- Exhibitor shall not store boxes, crates, construction materials or any other materials in or around the display booth area. Any unfinished and/or exposed part of a display booth must be draped at Exhibitor's expense.
- No banner, signage, header or lighting system will be allowed to be hung from overhead or to span any aisle.

PREP AREAS

- A prep area with shampoo bowls is available for use by exhibitors at no charge. These areas are located on the show floor and will be indicated with signs. Please keep areas as clean as possible so that other exhibitors may use the space

EXHIBITOR APPOINTED CONTRACTOR RULES/ UNION GUIDELINES

- Florida is a "right-to-work-state". Exhibitors may set up their own exhibits. They may also handle their own freight as long as it does not involve the use of motorized equipment such as forklifts or pallet jacks. Exhibitors need to coordinate dock times by contacting Freeman. Exhibitors cannot supply their own riggers, electricians or plumbers.

PRODUCT QUALIFICATIONS

- Premiere Orlando Show is a trade show for the Professional Beauty Industry. Products exhibited on the show floor should include only those which assist the professionals of the industry. Examples of products not allowed on the show floor include, but are not limited to, the following: unrelated industry clothing, jewelry, and other such boutique items. Show Management reserves the right to determine the eligibility of any company or product for inclusion in the conference and reserves the right to reject, effect or prohibit any exhibit in whole or in part, or any Exhibitor, or his representatives, with or without giving cause.
- **There will be no warnings, first time with unrelated product, Premiere will remove these items and storage fees will apply. Exhibitor in violation will be responsible for covering storage fee's.**
- Exhibitors may conduct business only within their booth space. Printed matter may not be distributed in any area of the show except within the confines of their booth, unless otherwise noted.

PRODUCT DIVERSION

- Premiere Show Group is well aware of the growing issue of product diversion. We are currently doing our part prior to the event and will continue looking for signs of product diversion on prior to the event and will continue looking for signs of product diversion on show site, but we need your help. Be sure to get pertinent information about the companies or individuals you're about to do business with. If you suspect product diversion at any time during the show, please bring it to our attention immediately!

SOUND & NOISE REGULATIONS

- The demonstration of products, services, and equipment is allowed, however, the noise level **must** be contained within your exhibit area and remain at a level that is not objectionable. Aisles surrounding your exhibit may not be used to hold or stage attendees to view the demonstration. Aisles must remain clear.
- Sound systems/ speakers utilized for stage presentations must be directed inward towards a viewing audience/ seating area and **not the aisle**.
- Speakers that are rigged must be hung at a downward angle and turned **inward** to face the stage/ platform area. If speakers are found in violation, the exhibitor is responsible for all cost incurred to correct the violation.
- Speakers will not be permitted in those areas that are solely used to conduct business.

Violation of Sound Regulations:

Premiere Show Group shall be the **sole arbiter** of acceptable sound levels and will take necessary action to reduce or remove that, which is objectionable. The following is the warning procedure:

- First notice of sound violation: verbal warning
- Second notice of sound violation: written warning
- Third notice of sound violation: disconnection of sound systems (30 Minutes)
- Fourth notice of sound violation: disconnection of sound systems (remainder of the day)

Exhibitors with 3 or less contiguous linear booths:

Exhibitors with 3 or less contiguous booths are permitted to use one powered speaker for voice amplification only, with a limitation of 100 watts.

Exhibitors with 4 or more contiguous booths:

Exhibitors with 4 or more contiguous booths will be granted permission to utilize sound systems of their design provided a platform presentation or educational program is presented.

ASCAP/ BMI ENDORSEMENT

- Music licensing copyright law: If any exhibitor plans to play music within their booth or theater at any trade show, they must be prepared to present proper ASCAP or BMI License. BMI and ASCAP are licensing organizations protecting the interests of its members-authors, composers & publishers of music.

NO SMOKING POLICY

- Premiere Show Group prohibits smoking in all Premiere Orlando Show areas. In compliance with the Florida Clean Air act, Florida Statues Section 386.205 and 386.206, smoking is not permitted in any public areas (i.e. restrooms, concourse, exhibit hall, lobbies, etc.) Designated smoking areas outside the building will be marked.

NO CHILDREN ALLOWED ON THE SHOW FLOOR

- For the safety and well being of your family, Premiere Show Group does not allow children under 16 years of age during move-in, show days, and move-out. We appreciate your cooperation with this policy.

TAXES

- Exhibitors shall be responsible for obtaining any tax identification numbers and paying all taxes, license fees, or other charges that shall become due to any government authority in connection with their activity at the exposition.

SECURITY

- DO NOT LEAVE YOUR TOOLS, PERSONAL EFFECTS, OR VALUABLES UNATTENDED AT ANY TIME DURING THE MOVE-IN OR MOVE-OUT PERIOD. Remember: tool kits, hand tools, and all light and portable objects are easy targets for petty theft. Be sure to lock these items up when you are not using them. At the close of the show, pack your valuables first. Be sure all items are clearly identified as your property. Clear, permanent identification of your property will reduce the temptation and make the return of these items easier, should they disappear. Every effort will be made to maintain security to prevent theft or disappearance of any exhibitor material. We would appreciate your cooperation in this area.

- Show Management and the Orange County Convention Center will exercise reasonable care in safeguarding Exhibitor's property, **neither Premiere Shows, Inc., the OCCC, Freeman or any of their officers, agents or employees, assume any responsibility for such property.**

- Security services are provided by Show Management and the OCCC, at all show floor entry points and overnight during non-show hours, but the ultimate responsibility for booths and property rests with the individual exhibitor. Here are a few common sense security tips:

- Do not leave your booth(s) unattended at any time during move in/out or show hours.

- **Consider hiring additional security to stay in your booth overnight. Although the show provides several overnight guards in each hall, it is impossible to guarantee complete safety of everyone's belongings.**

- In a large show even large crates can disappear. You might want to consider painting your crates distinctive colors for easy recognition.

- Work only in your own booth(s). Do not enter other exhibitors' booths during move-in before or after official show hours or during move-out.

- **Obtain proper insurance coverage for your goods, including transit to and from the show site.** Low cost exhibitor insurance is available through many companies.